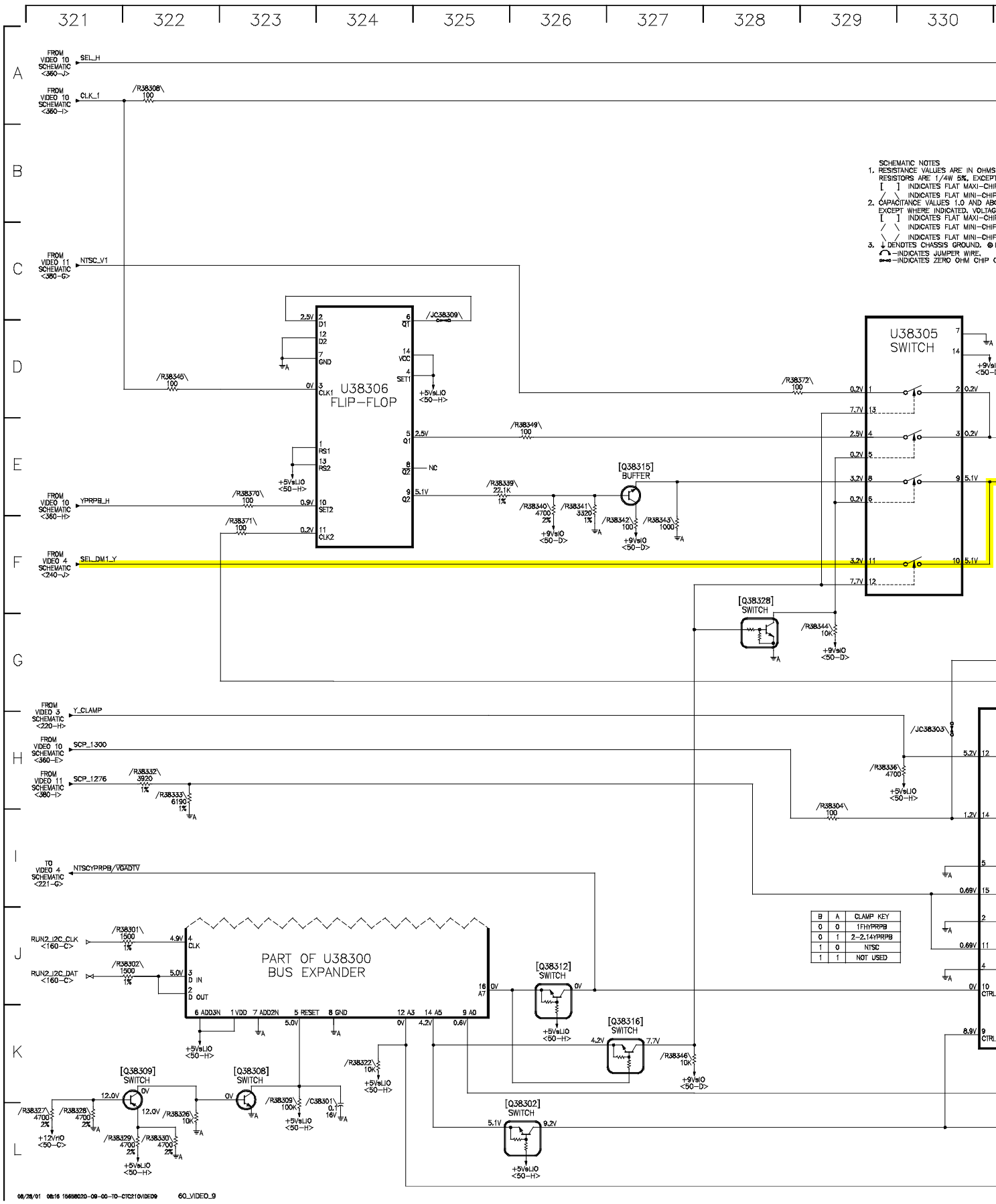
321
322
323
324
325
326
327
328
329
330
SCHEMATIC NOTES
1. RESISTANCE VALUES ARE IN OHMS
RESISTORS ARE 1/4W 5%, EXCEPT
[ ] INDICATES FLAT MAXI-CHIP
/ \ INDICATES FLAT MINI-CHIP
2. CAPACITANCE VALUES 1.0 AND ABO
EXCEPT WHERE INDICATED. VOLTAG
[ ] INDICATES FLAT MAXI-CHIP
/ \ INDICATES FLAT MINI-CHIP
\ / INDICATES FLAT MINI-CHIP
3. DENOTES CHASSIS GROUND.
—INDICATES JUMPER WIRE.
—INDICATES ZERO OHM CHIP C
FROM VIDEO 10 SCHEMATIC <360-J>
SEL_H
FROM VIDEO 10 SCHEMATIC <360-I>
CLK_1
/R38308\ 100
FROM VIDEO 11 SCHEMATIC <360-G>
NTSC_V1
U38306 FLIP-FLOP
/JC38309\
+5VsLIO <50-H>
/R38345\ 100
/R38349\ 100
/R38372\ 100
U38305 SWITCH
+9VsI <50-I
[Q38315] BUFFER
/R38339\ 22.1K 1%
/R38340\ 4700 2%
/R38341\ 3320 1%
/R38342\ 100
/R38343\ 1000
+9VsIO <50-D>
FROM VIDEO 10 SCHEMATIC <360-H>
YPRPB_H
/R38370\ 100
/R38371\ 100
FROM VIDEO 4 SCHEMATIC <240-J>
SEL_DM1_Y
[Q38328] SWITCH
/R38344\ 10K
FROM VIDEO 3 SCHEMATIC <220-H>
Y_CLAMP
/JC38303\
FROM VIDEO 10 SCHEMATIC <360-E>
SCP_1300
/R38336\ 4700
/R38304\ 100
FROM VIDEO 11 SCHEMATIC <380-I>
SCP_1276
/R38332\ 3920 1%
/R38333\ 6190 1%
TO VIDEO 4 SCHEMATIC <221-G>
NTSCYPRPB/VGADTV
RUN2_I2C_CLK <160-C>
RUN2_I2C_DAT <160-C>
/R38301\ 1500 1%
/R38302\ 1500 1%
PART OF U38300 BUS EXPANDER
[Q38312] SWITCH
[Q38316] SWITCH
/R38322\ 10K
/R38346\ 10K
[Q38309] SWITCH
[Q38308] SWITCH
/R38309\ 100K
/C38301\ 0.1 16V
/R38327\ 4700 2%
/R38328\ 4700 2%
/R38326\ 10K
/R38329\ 4700 2%
/R38330\ 4700 2%
+12VnO <50-C>
[Q38302] SWITCH
B A CLAMP KEY
0 0 1FHYPRPB
0 1 2-2.14YPRPB
1 0 NTSC
1 1 NOT USED
08/28/01 08:16 15658020-09-00-TO-CTC210VIDEO9 60_VIDEO_9

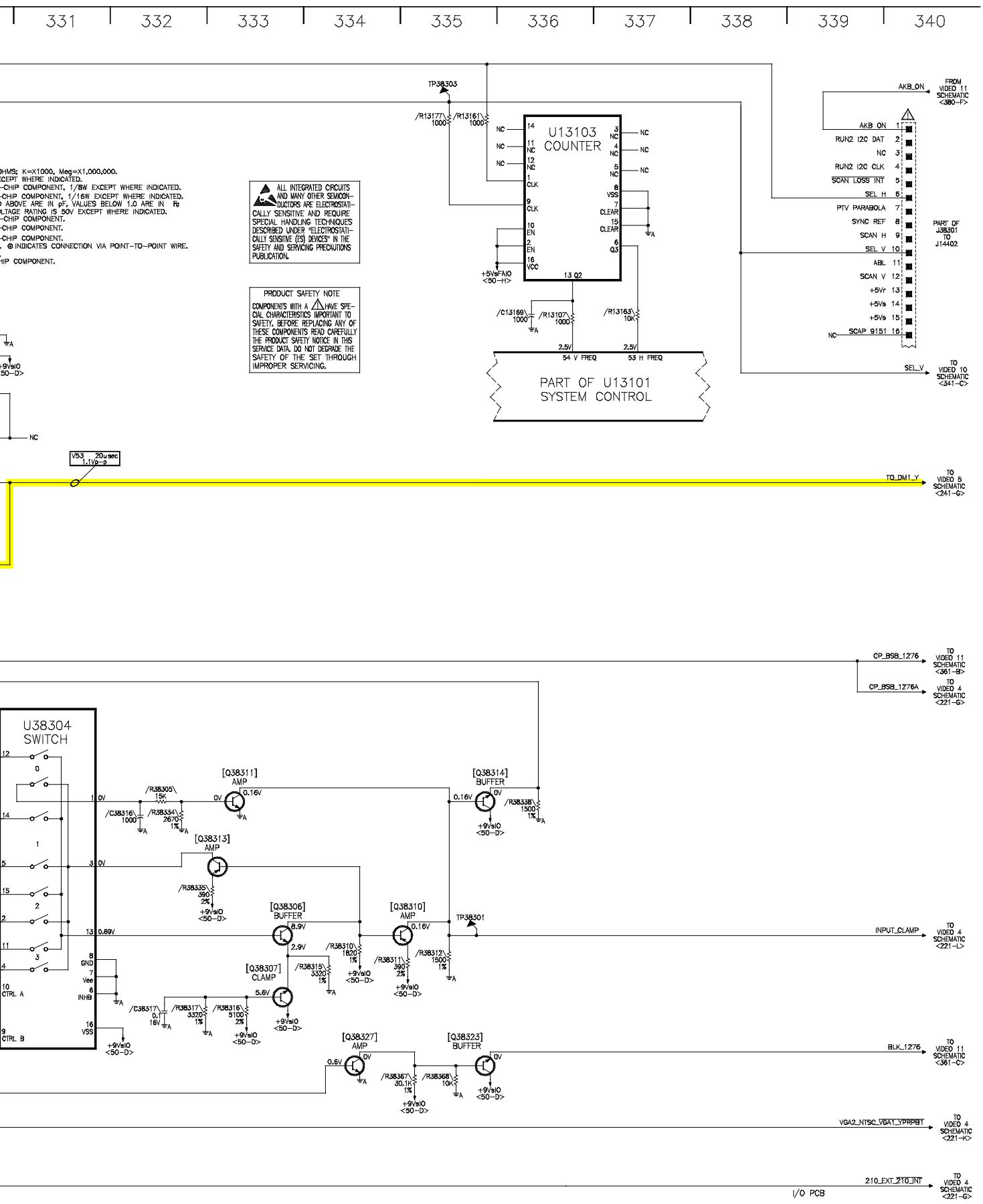
331
332
333
334
335
336
337
338
339
340
TP38303
/R13177\ 1000
/R13161\ 1000
U13103
COUNTER
NC
CLK
EN
VCC
VSS
CLEAR
Q2
Q3
+5VsFAIO <50-H>
/C13169\ 1000
/R13107\ 1000
/R13163\ 10K
2.5V
54 V FREQ
53 H FREQ
PART OF U13101
SYSTEM CONTROL
ALL INTEGRATED CIRCUITS AND MANY OTHER SEMICONDUCTORS ARE ELECTROSTATICALLY SENSITIVE AND REQUIRE SPECIAL HANDLING TECHNIQUES DESCRIBED UNDER "ELECTROSTATICALLY SENSITIVE (ES) DEVICES" IN THE SAFETY AND SERVICING PRECAUTIONS PUBLICATION.
PRODUCT SAFETY NOTE
COMPONENTS WITH A ⚠ HAVE SPECIAL CHARACTERISTICS IMPORTANT TO SAFETY. BEFORE REPLACING ANY OF THESE COMPONENTS READ CAREFULLY THE PRODUCT SAFETY NOTICE IN THIS SERVICE DATA. DO NOT DEGRADE THE SAFETY OF THE SET THROUGH IMPROPER SERVICING.
AKB_ON
FROM VIDEO 11 SCHEMATIC <380-F>
AKB ON
RUN2 I2C DAT
RUN2 I2C CLK
SCAN LOSS INT
SEL H
PTV PARABOLA
SYNC REF
SCAN H
SEL V
ABL
SCAN V
+5Vr
+5Vs
SCAP 9151
PART OF J38501 TO J14402
SEL_V
TO VIDEO 10 SCHEMATIC <341-C>
V53 20usec 1.1Vp-p
TO_DM1_Y
TO VIDEO 5 SCHEMATIC <241-G>
CP_BSB_1276
TO VIDEO 11 SCHEMATIC <361-B>
CP_BSB_1276A
TO VIDEO 4 SCHEMATIC <221-G>
U38304
SWITCH
CTRL A
CTRL B
GND
Vee
INHB
VSS
[Q38311] AMP
[Q38313] AMP
[Q38314] BUFFER
[Q38306] BUFFER
[Q38310] AMP
[Q38307] CLAMP
[Q38327] AMP
[Q38323] BUFFER
/R38305\ 15K
/C38316\ 1000
/R38334\ 2670 1%
/R38335\ 390 2%
/R38336\ 1500 1%
/R38310\ 1820 1%
/R38315\ 3320 1%
/R38311\ 390 2%
/R38312\ 1500 1%
/C38317\ 0.1 16V
/R38317\ 3320 1%
/R38316\ 5100 2%
/R38367\ 30.1K 1%
/R38368\ 10K
+9VsIO <50-D>
TP38301
INPUT_CLAMP
TO VIDEO 4 SCHEMATIC <221-L>
BLK_1276
TO VIDEO 11 SCHEMATIC <361-C>
VGA2_NTSC_VGA1_YPRPBT
TO VIDEO 4 SCHEMATIC <221-K>
210_EXT_210_INT
I/O PCB
TO VIDEO 4 SCHEMATIC <221-G>